KENWOOD

STEREO AMPLIFIER

(KA-1200B) KA-1200G

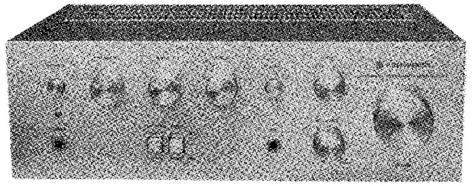

Q1, Q2 : 2SC900E.F OR 2SC732 GR,BL
Q3, Q4 : 2SC900E.F.U OR 2SC733 GR,BL OR 2SC945P
Q5, Q6 : 2SC733GR,BL OR 2SC945P

Q7, Q8 : 2SC733BR,GL ON 2SC945P Q9,Q10,Q21 : 2SC734 O.Y Q11,Q12: 2SC1166 O.Y
Q13,Q14: 2SA661 O.Y OR Q15~18: 2SC790 O.Y Q19,Q20 : 2SC945P

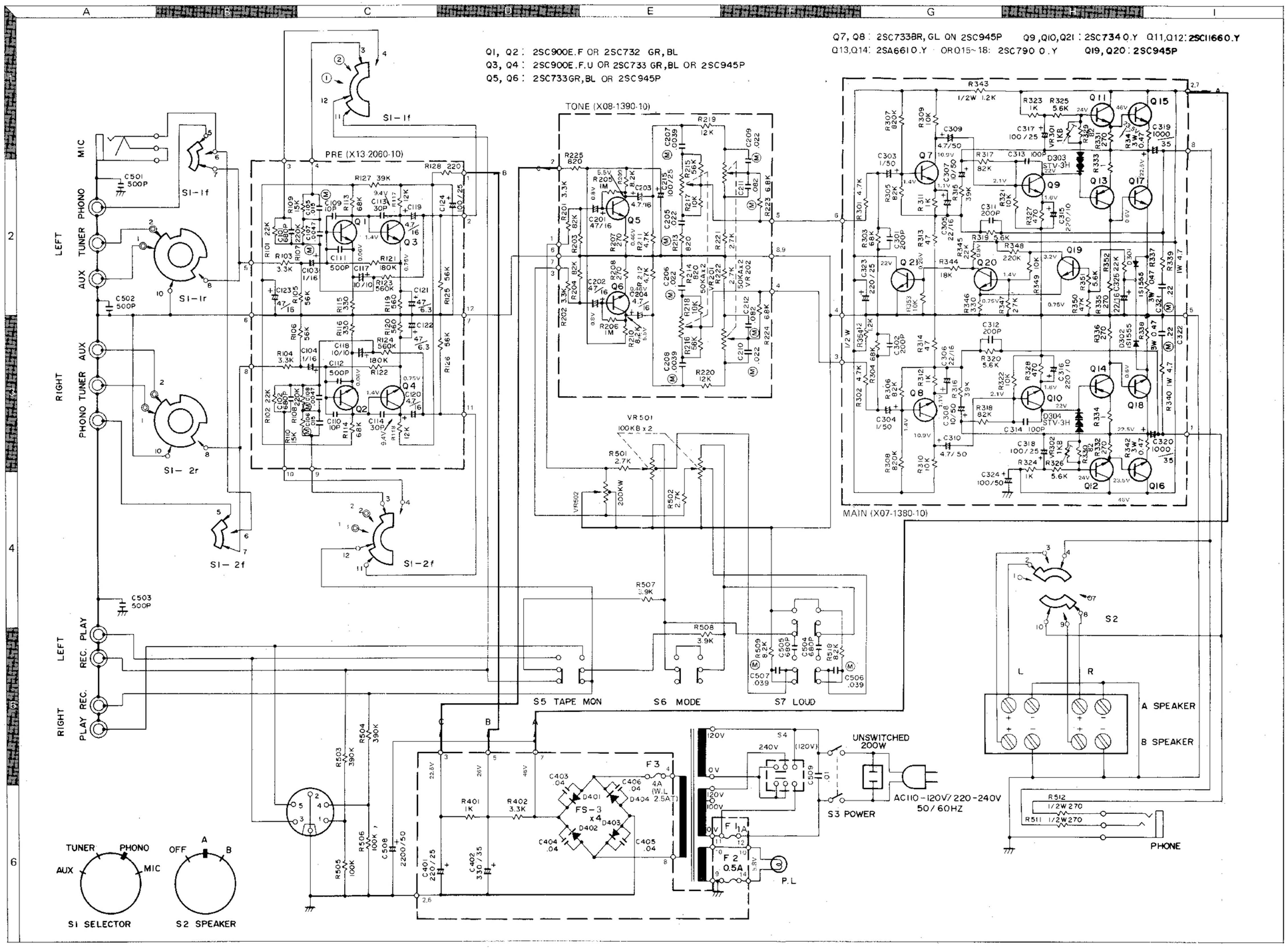

SPECIFICATIONS

MAIN AMPLIFIER SECTION

RMS Power Output	
Both channels driven	13 watts x 2 into 8 ohms at 1,000 Hz
	16 watts x 2 into 4 ohms at 1,000 Hz
Dynamic Power Output	42 watts into 8 ohms
	58 watts into 4 ohms
Total Harmonic Distortion	0.8% at rated power into 8 ohms
	0.1% at ½ rated power into 8 ohms at 1,000 Hz
Intermodulation Distortion	0.8% at rated power into 8 ohms
(60 Hz:7 KHz=4:1)	0.1% at ½ rated power into 8 ohms
Power Bandwidth	20 Hz–40,000 Hz
Signal to Noise Ratio at 50 mW	50 dB
Damping Factor	30 at 8 ohms
Speaker Impedance	Accept 4 ohms to 16 ohms

PRE-AMPLIFIER SECTION

Input Sensitivity and Impedance	
Phono	2.5 mV, 50 k ohms
Tuner	150 mV, 50 k ohms
AUX	150 mV, 50 k ohms
Tape Play	150 mV, 50 k ohms
Mic	3.0 mV, 50 k ohms
Maximum Input Voltage	
Phono	80 mV, T.H.D. 0.8% at 1,000 Hz
Signal to noise Ratio (I.H.F. A CURVE)	
Phono	68 dB
Tuner	80 dB
AUX	80 dB
Tape Play	80 dB
Mic	68 dB
Output Voltage and Impedance	
Tape Rec. (pin)	150 mV, 110 ohms
(DIN connector)	30 mV, 80 k ohms
Frequency Response	
Phono	RIAA Standard curve ±1.0 dB
Tuner, AUX, Tape Play	20 Hz -40,000 Hz +0, −2 dB
Tone Controls	
Bass	±10 dB at 100 Hz
Treble	±10 dB at 10,000 Hz
Loudness Control (−30 dB)	+8 dB at 100 Hz
	+5 dB at 10,000 Hz

GENERAL

Switches	
Speaker Selector	OFF, A, B
Input Selector	AUX, TUNER, PHONO, MIC
Mode	STEREO, MONO
Tape Monitor	SOURCE, PLAY
Others	LOUDNESS
AC Outlet	Unswitched 1
Power Consumption	120 watts at full power
	9 watts at no signal
Dimensions	W 14-5/8" (372 mm), H 4-15/16" (125 mm), D 9-7/8" (251.5 mm)
Weight	10.8 Lbs (4.9 Kg)